1-3/8" Ventilation Louver Doors (No Moulding Type)

1-3/8" Louver Doors (Paint Grade)
(No Moulding Type)
Profile # : SS138-LVR(V)-14 (PG)

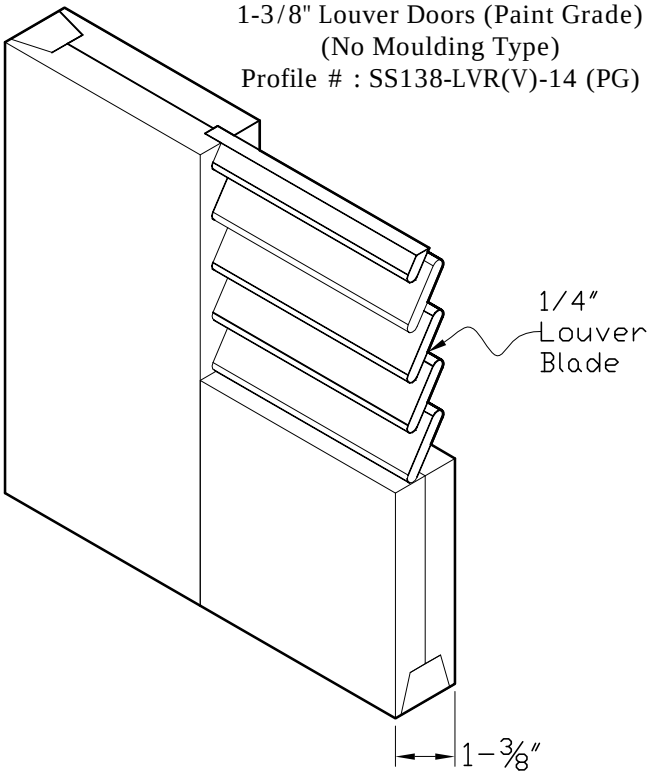

1-3/8" Louver Doors (Paint Grade)
(No moulding type)
Profile # : SS138-LVR(V)-38 (PG)

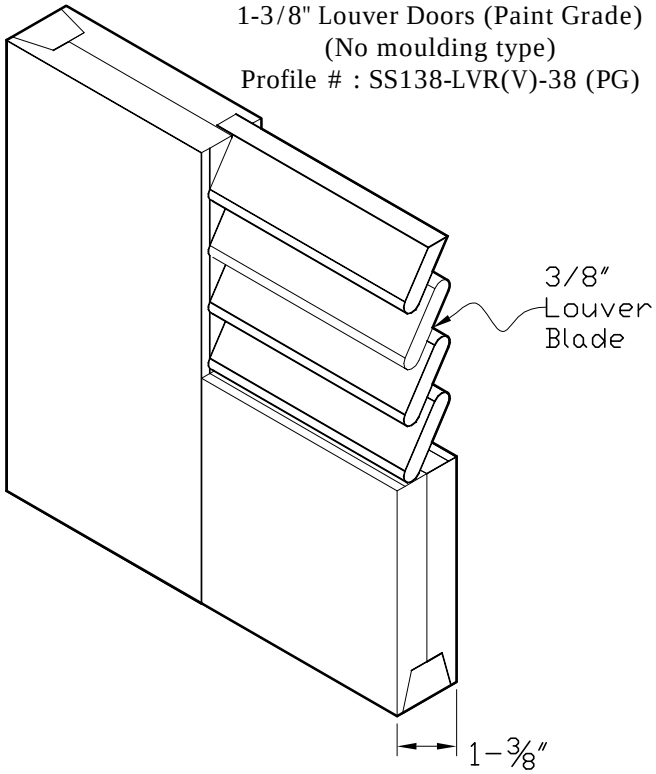

1-3/8" Louver Doors (Stain Grade)
(No Moulding Type)
Profile # : SS138-LVR(V)-14 (SG)

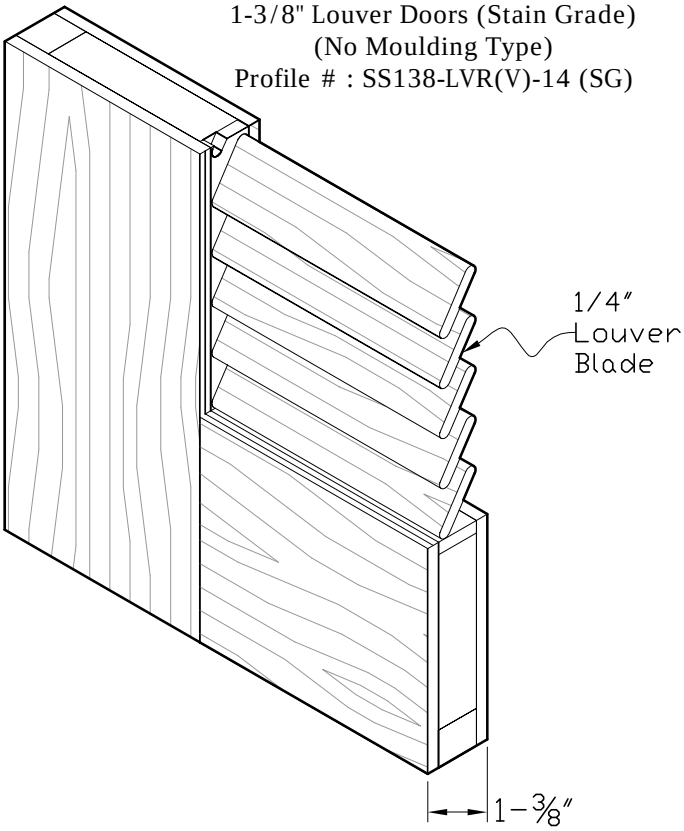
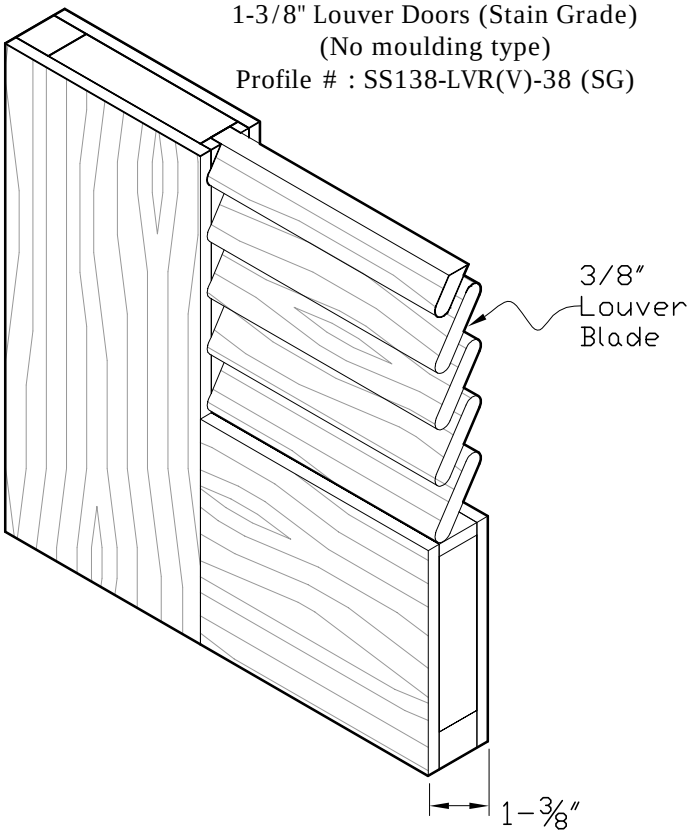
1-3/8" Louver Doors (Stain Grade)
(No moulding type)
Profile # : SS138-LVR(V)-38 (SG)