Privacy Louver Doors (Raised Moulding Type)

1-3/8" Louver Doors (Paint Grade)
(Raised Moulding Type)
Profile # : K2A-138-LVR(P)-34 (PG)

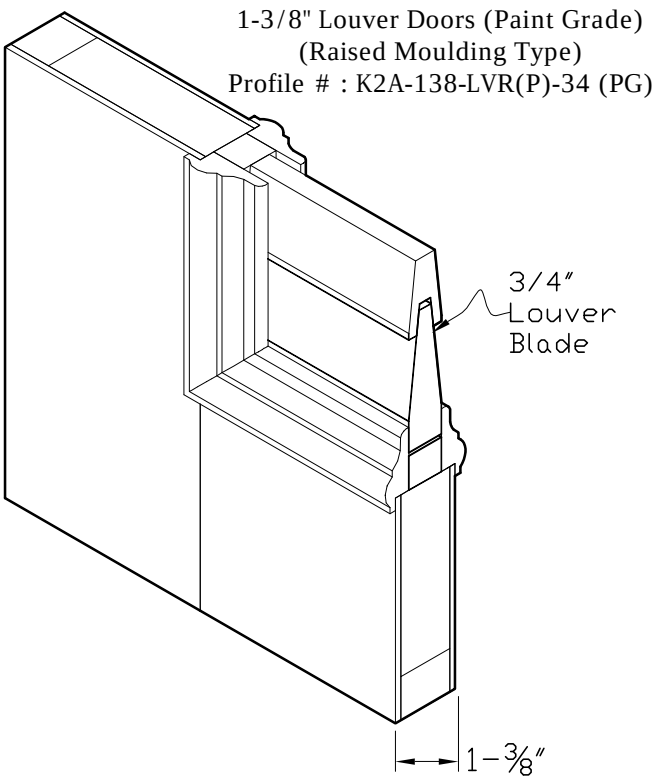

1-3/4" Louver Doors (Paint Grade)
(Raised Moulding Type)
Profile # : K2A-134-LVR(P)-118 (PG)

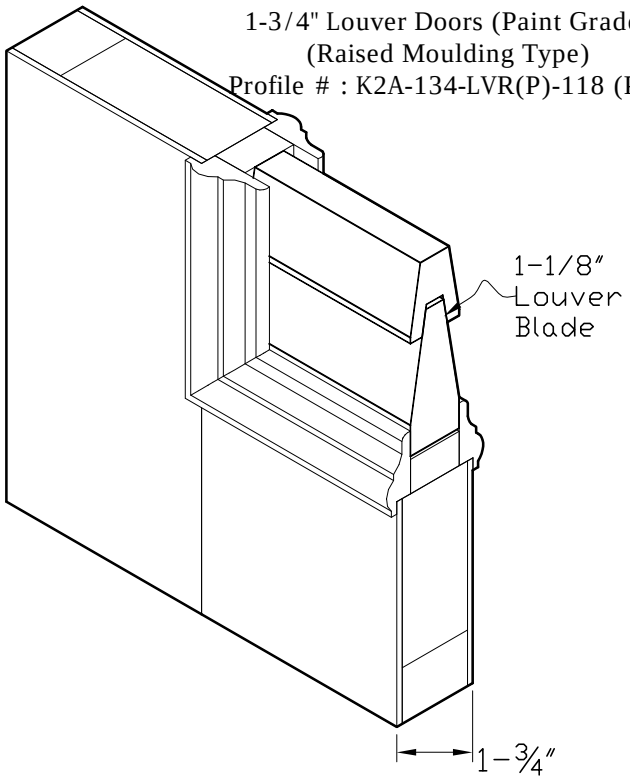

1-3/8" Louver Doors (Stain Grade)
(Raised Moulding Type)
Profile # : K2A-138-LVR(P)-34 (SG)

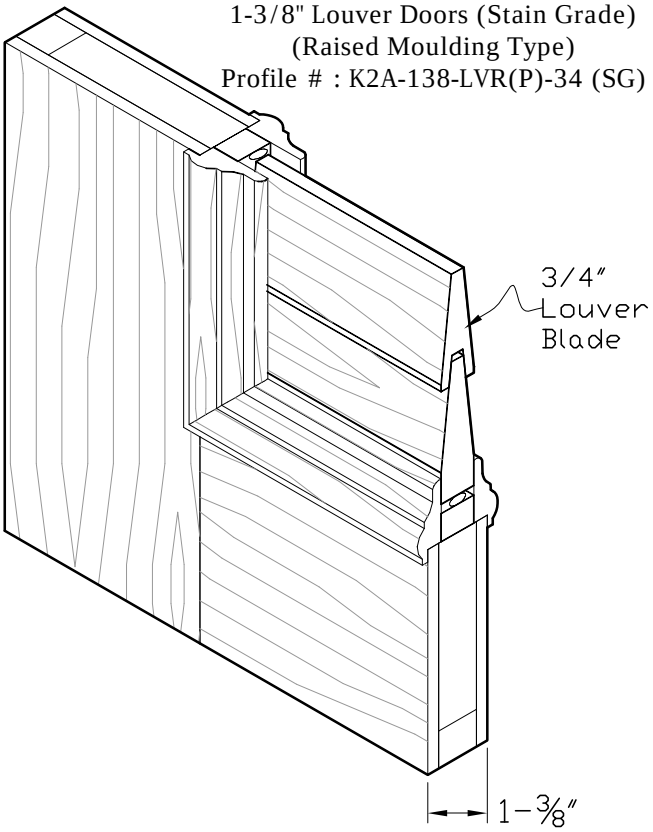
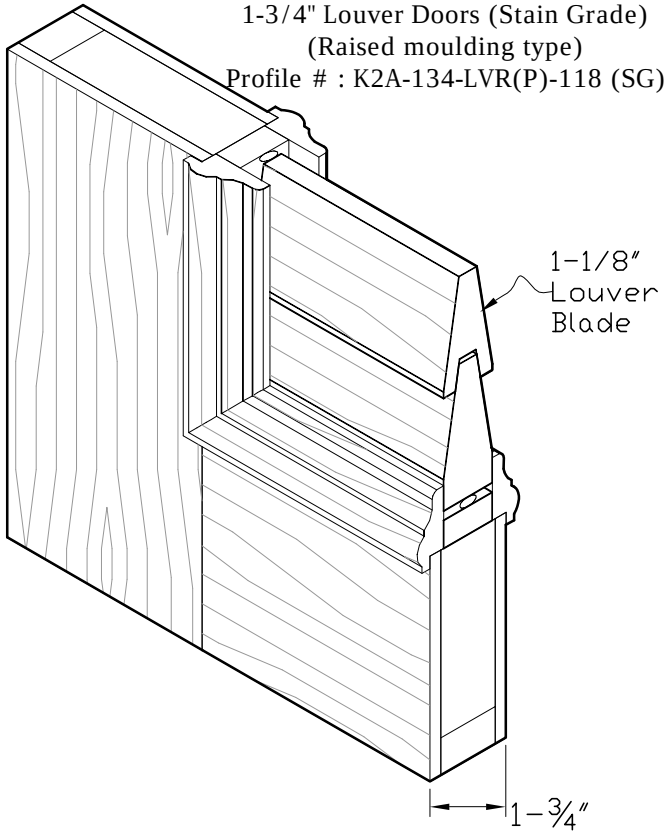
1-3/4" Louver Doors (Stain Grade)
(Raised moulding type)
Profile # : K2A-134-LVR(P)-118 (SG)